LEOPARD IMAGING INC

LI-XAVIER-KIT-IMX335CS-X Data Sheet

Key Features

- Compatible with Nvidia® Jetson AGX Xavier™ Developer Kit
- MIPI CSI-2 interface
- Support up to six cameras
- Two adapter board options
  - LI-JXAV-MIPI-ADPT-4CAM
  - LI-JXAV-MIPI-ADPT-6CAM-FP
- Sony Diagonal 6.52 mm (Type 1/2.8) 5MP CMOS Image Sensor IMX335
- Active pixels: 2608H x 1960V
- Color camera
- Length of the I-PEX cable: 300mm
- Support multiple length cables
- Connector Part#: 20525-030E-02C
- Provide customization services
- Part#:

(1 cam) LI-XAVIER-KIT-IMX335CS
(2 cam) LI-XAVIER-KIT-IMX335CS-D
(3 cam) LI-XAVIER-KIT-IMX335CS-T
(4 cam) LI-XAVIER-KIT-IMX335CS-Q
(6 cam) LI-XAVIER-KIT-IMX335CS-H

Applications

- Industrial Applications
- Intelligent Transportation System (ITS) Cameras

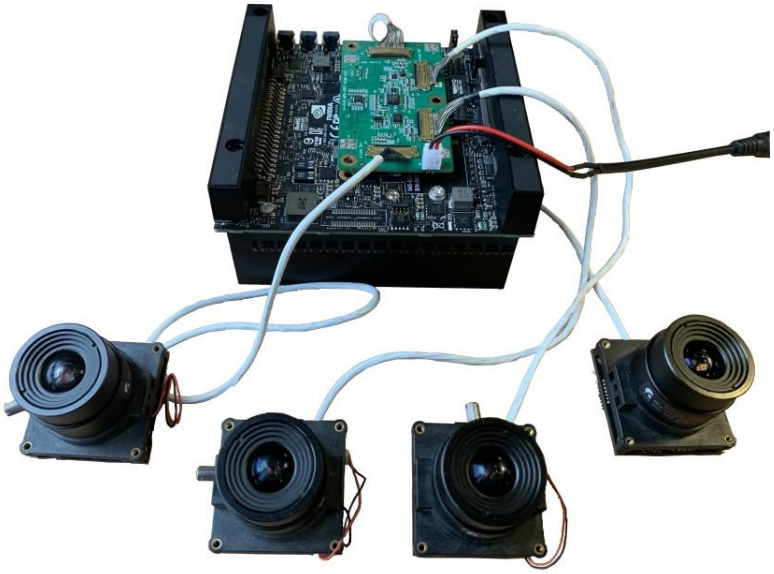

Lens Spec

- Model: ES0522F.IR
- Focal length: 5.0 mm
- Aperture, F/#: 2.2
- FOV (D/H/V): 81 °/ 65.5 °/49.5 °
- TV Distortion: < -8%
- Mount Type: CS

BOM

Nvidia AGX Xavier Developer Kit not included

#	Items	QTY
1	LI-JXAV-MIPI-ADPT-4CAM or LI-JXAV-MIPI-ADPT-6CAM-FP	1
2	LI-IMX335-MIPI-CS	1, 2, 3, 4 or 6
3	FAW-1233-03 cable	1, 2, 3, 4 or 6

Leopard Imaging Inc.

48820 Kato Rd, Suite 100B, Fremont, CA 94538, USA
Phone: +1-408-263-0988
Fax: +1-408-217-1960
Email:sales@leopardimaging.com
Website: www.leopardimaging.com

LI-XAVIER-KIT-IMX335CS

BOM

#	Items	QTY
1	LI-JXAV-MIPI-ADPT-4CAM	1
2	LI-IMX335-MIPI-CS	1
3	FAW-1233-03 cable	1

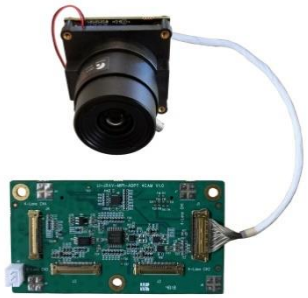

LI-XAVIER-KIT-IMX335CS-D

BOM

#	Items	QTY
1	LI-JXAV-MIPI-ADPT-4CAM	1
2	LI-IMX335-MIPI-CS	2
3	FAW-1233-03 cable	2

LI-XAVIER-KIT-IMX335CS-T

BOM

#	Items	QTY
1	LI-JXAV-MIPI-ADPT-4CAM	1
2	LI-IMX335-MIPI-CS	3
3	FAW-1233-03 cable	3

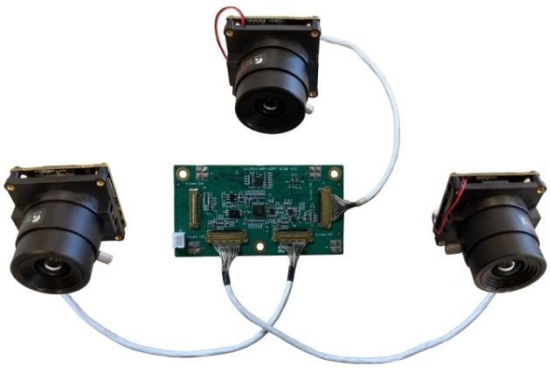

LI-XAVIER-KIT-IMX335CS-Q

BOM

#	Items	QTY
1	LI-JXAV-MIPI-ADPT-4CAM	1
2	LI-IMX335-MIPI-CS	4
3	FAW-1233-03 cable	4

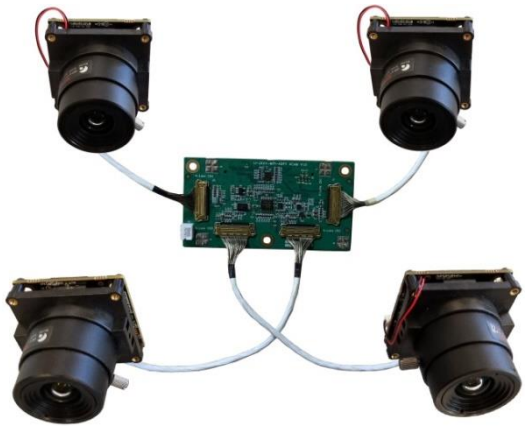

Leopard Imaging Inc.

48820 Kato Rd, Suite 100B, Fremont, CA 94538, USA
Phone: +1-408-263-0988
Fax: +1-408-217-1960
Email:sales@leopardimaging.com
Website: www.leopardimaging.com

LI-XAVIER-KIT-IMX335CS-H

BOM

#	Items	QTY
1	LI-JXAV-MIPI-ADPT-**6CAM-FP**	1
2	LI-IMX335-MIPI-CS	6
3	FAW-1233-03 cable	6

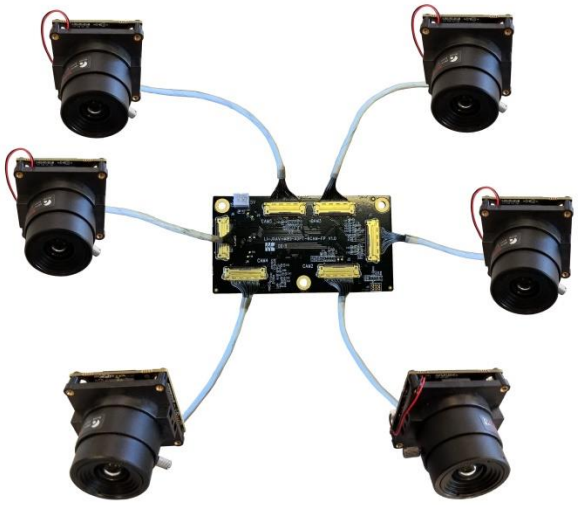

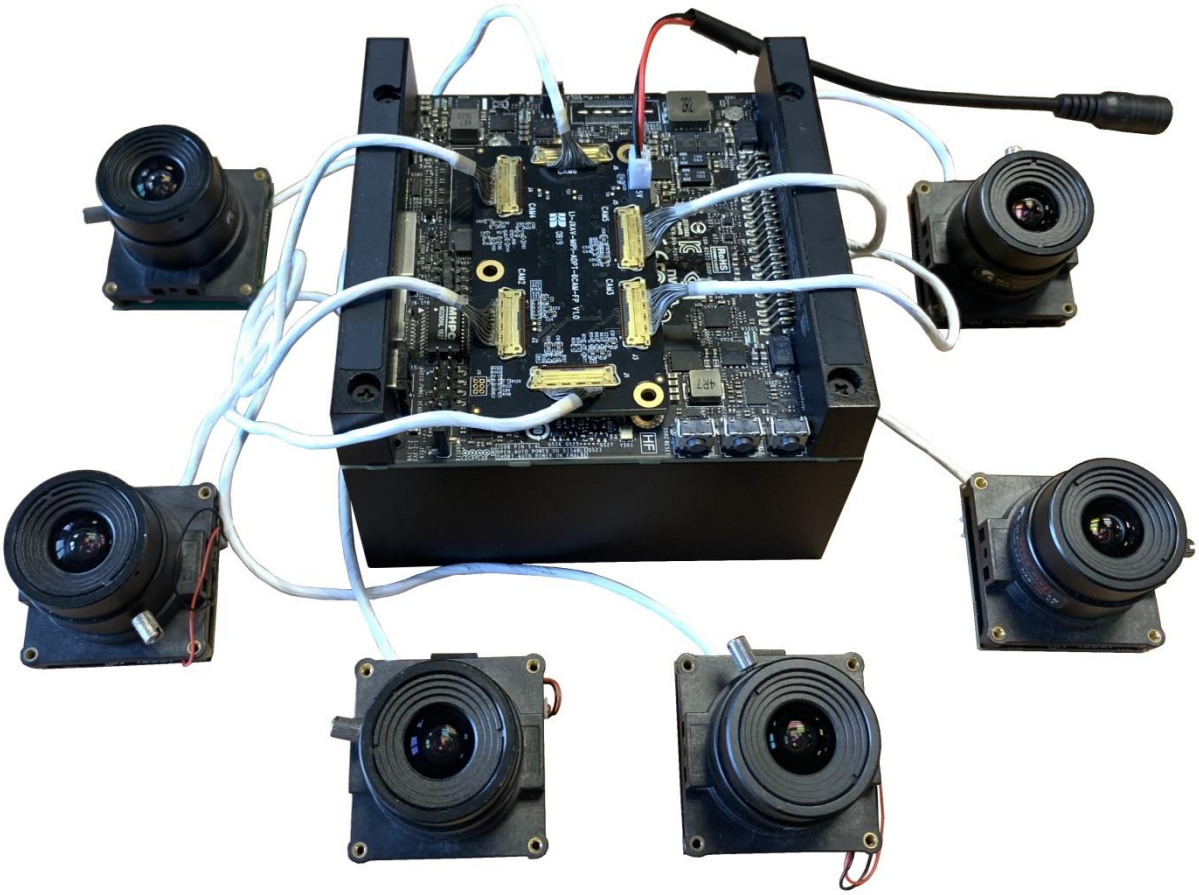

Leopard Imaging Inc.

48820 Kato Rd, Suite 100B, Fremont, CA 94538, USA
Phone: +1-408-263-0988
Fax: +1-408-217-1960
Email:sales@leopardimaging.com
Website: www.leopardimaging.com

Dimensions

LI-IMX335-MIPI-CS

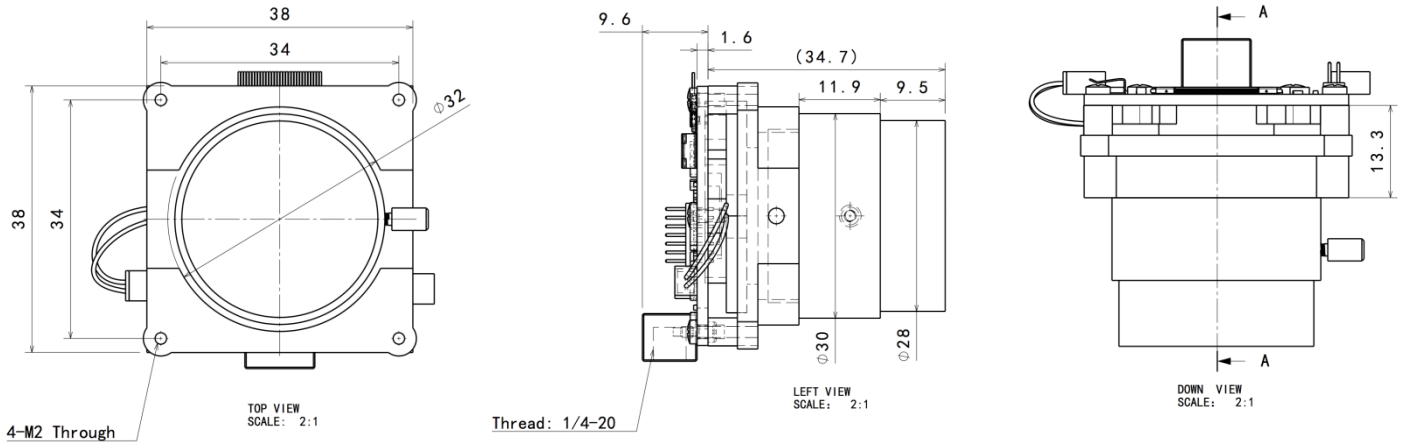

LI-JXAV-MIPI-ADPT-4CAM

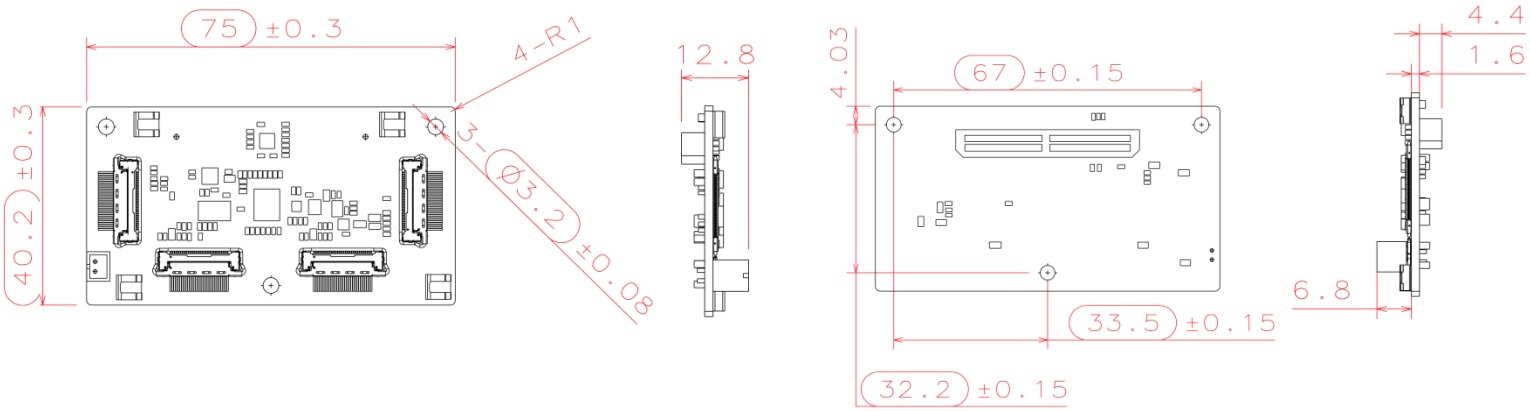

FAW-1233-03

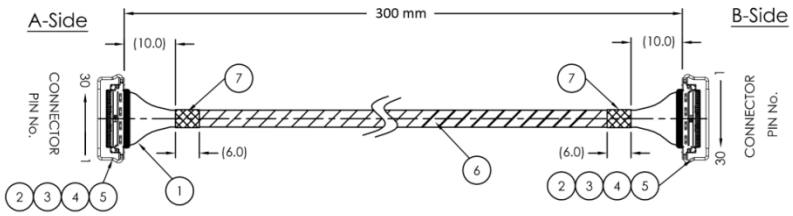

Leopard Imaging Inc.

48820 Kato Rd, Suite 100B, Fremont, CA 94538, USA
Phone: +1-408-263-0988
Fax: +1-408-217-1960
Email: sales@leopardimaging.com
Website: www.leopardimaging.com

LI-JXAV-MIPI-ADPT-4CAM

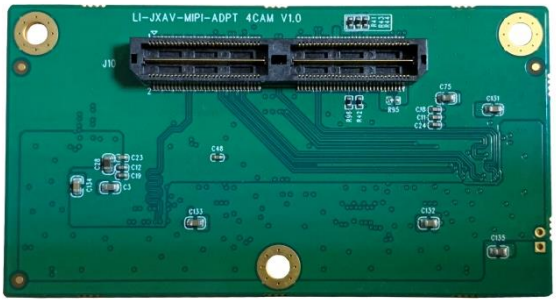

Interfaces

Interface J1

- Part#: 20525-030E-02C
- Number of Positions: 30
- Pitch: 0.4mm
- Mating I-PEX cable: FAW-1233-03 (300mm)

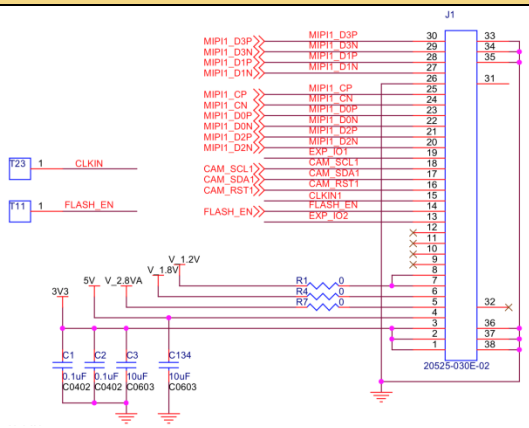

Interface J2

- Part#: 20525-030E-02C
- Number of Positions: 30
- Pitch: 0.4mm
- Mating I-PEX cable: FAW-1233-03 (300mm)

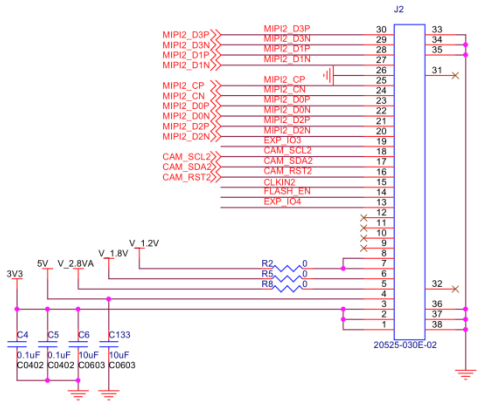

Interface J3

- Part#: 20525-030E-02C
- Number of Positions: 30
- Pitch: 0.4mm
- Mating I-PEX cable: FAW-1233-03 (300mm)

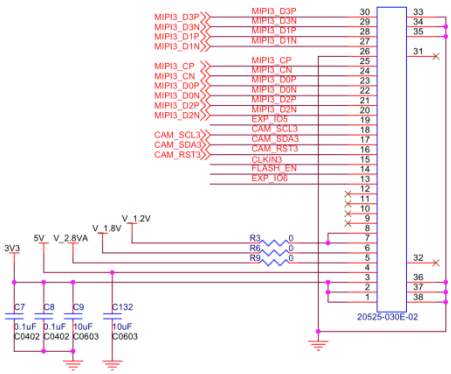

Leopard Imaging Inc.

48820 Kato Rd, Suite 100B, Fremont, CA 94538, USA
Phone: +1-408-263-0988
Fax: +1-408-217-1960
Email: sales@leopardimaging.com
Website: www.leopardimaging.com

Interface J4

- Part#: 20525-030E-02C
- Number of Positions: 30
- Pitch: 0.4mm
- Mating I-PEX cable: FAW-1233-03 (300mm)

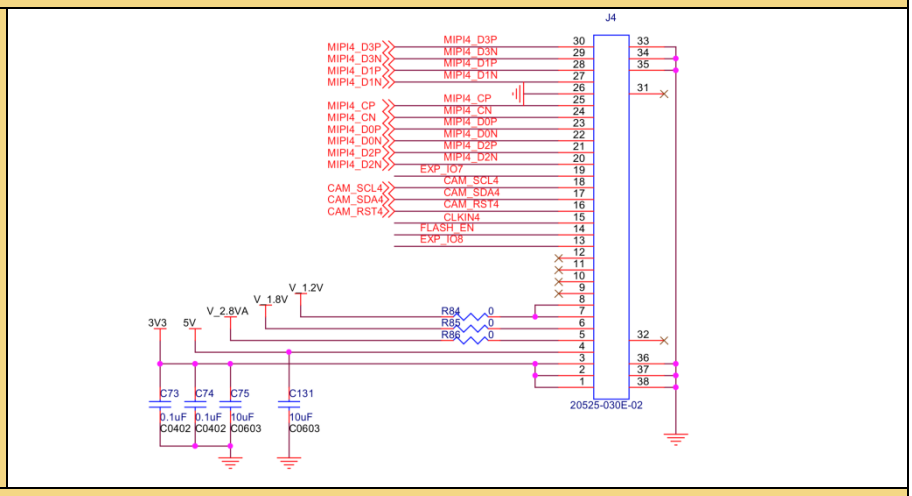

Interface J5

- Part#: 0894000220
- Number of Positions: 2
- Pitch: 2mm

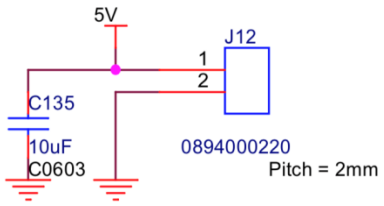

Interface J10

- Part#: QTH-060-01-L-D-A
- Number of Positions: 120
- Number of Rows: 2
- Pitch: 0.5 mm

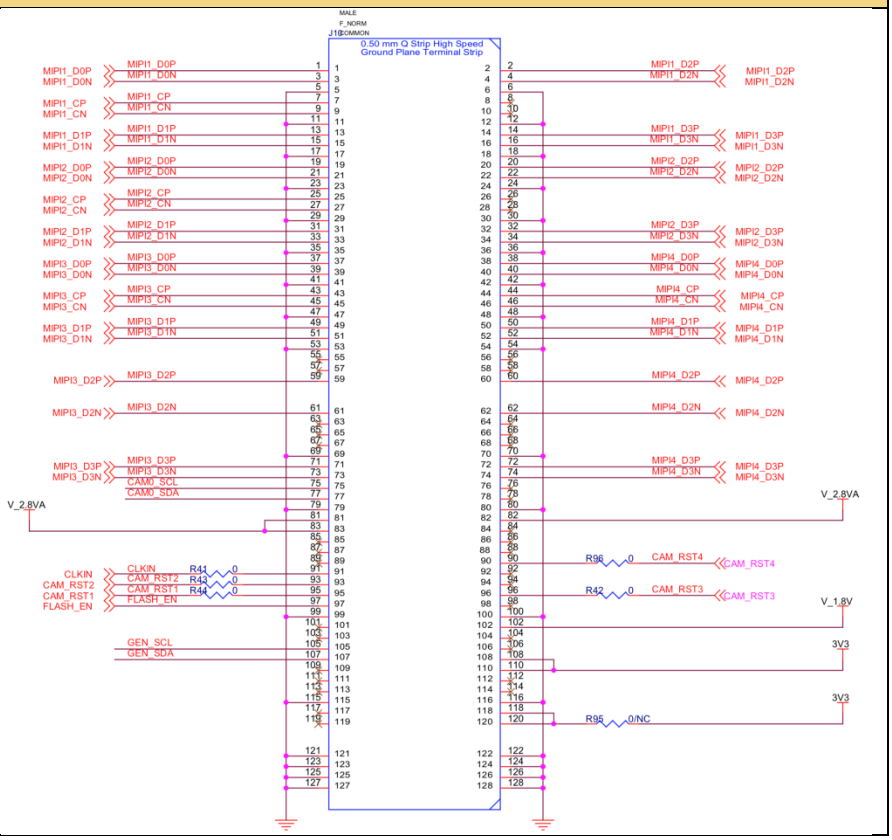

Leopard Imaging Inc.

48820 Kato Rd, Suite 100B, Fremont, CA 94538, USA
Phone: +1-408-263-0988
Fax: +1-408-217-1960
Email:sales@leopardimaging.com
Website: www.leopardimaging.com

LI-JXAV-MIPI-ADPT-6CAM-FP

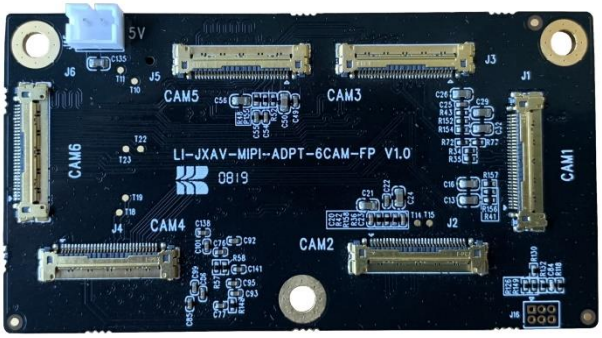

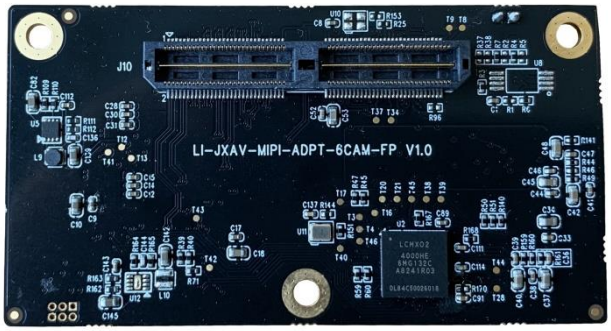

Interfaces

Interface J1 (camera channel 1)

- Part#: 20525-030E-02C
- Number of Positions: 30
- Pitch: 0.4mm
- Mating I-PEX cable: FAW-1233-xx

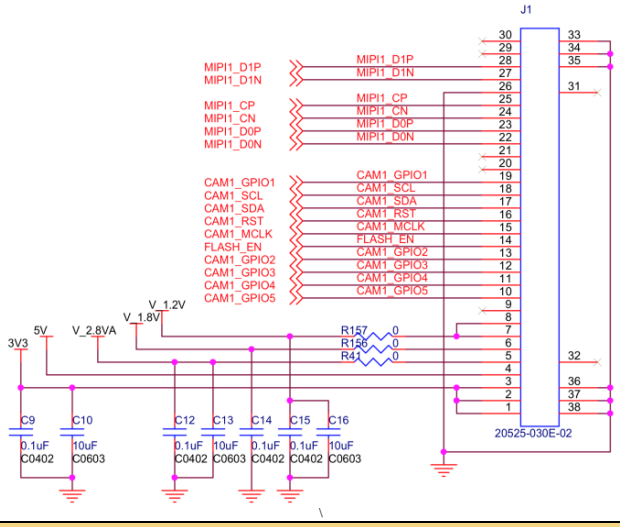

Interface J2 (camera channel 2)

- Part#: 20525-030E-02C
- Number of Positions: 30
- Pitch: 0.4mm
- Mating I-PEX cable: FAW-1233-xx

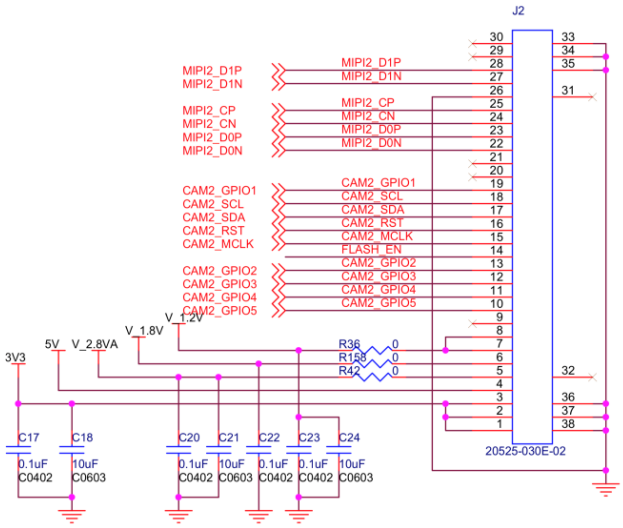

Leopard Imaging Inc.

48820 Kato Rd, Suite 100B, Fremont, CA 94538, USA
Phone: +1-408-263-0988
Fax: +1-408-217-1960
Email:sales@leopardimaging.com
Website: www.leopardimaging.com

Interface J3 (camera channel 3)

- Part#: 20525-030E-02C
- Number of Positions: 30
- Pitch: 0.4mm
- Mating I-PEX cable: FAW-1233-xx

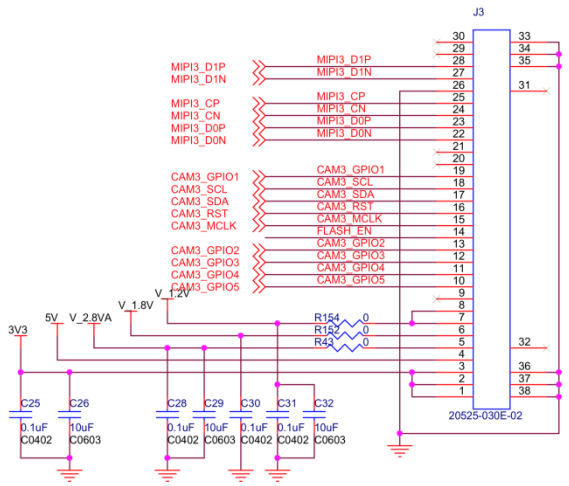

Interface J4 (camera channel 4)

- Part#: 20525-030E-02C
- Number of Positions: 30
- Pitch: 0.4mm
- Mating I-PEX cable: FAW-1233-xx

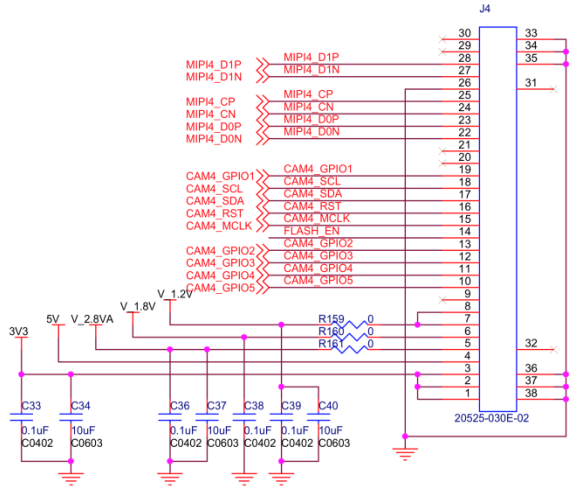

Interface J5 (camera channel 5)

- Part#: 20525-030E-02C
- Number of Positions: 30
- Pitch: 0.4mm
- Mating I-PEX cable: FAW-1233-xx

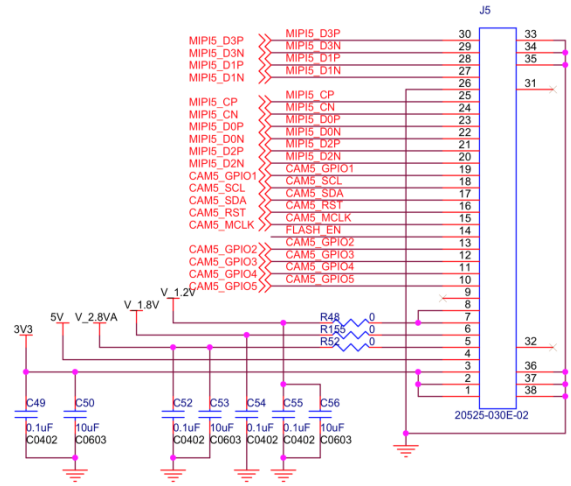

Leopard Imaging Inc.

48820 Kato Rd, Suite 100B, Fremont, CA 94538, USA
Phone: +1-408-263-0988
Fax: +1-408-217-1960
Email:sales@leopardimaging.com
Website: www.leopardimaging.com

Interface J6 (camera channel 6)

- Part#: 20525-030E-02C
- Number of Positions: 30
- Pitch: 0.4mm
- Mating I-PEX cable: FAW-1233-xx

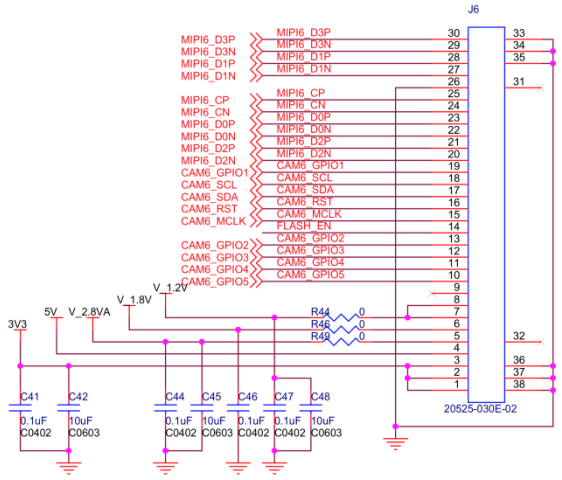

Interface J16 (FPGA programming interface)

- Part#: 20021311-00006T4LF
- Number of Positions: 6
- Pitch: 0.050" (1.27mm)
- Number of Rows: 2

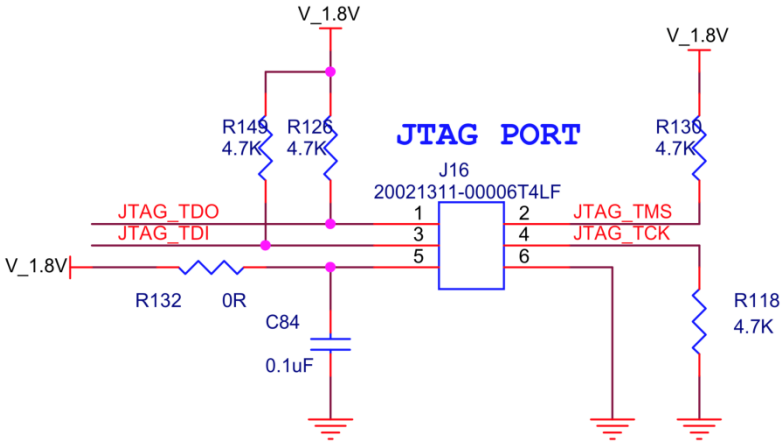

Interface J15 (External power input interface)

- Part#: 0894000220
- Number of Positions: 2
- Pitch: 2 mm

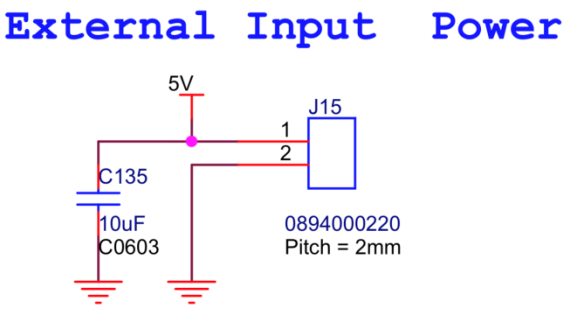

Leopard Imaging Inc.

48820 Kato Rd, Suite 100B, Fremont, CA 94538, USA
Phone: +1-408-263-0988
Fax: +1-408-217-1960
Email:sales@leopardimaging.com
Website: www.leopardimaging.com

Interface J10 (To Xavier)

- Part#: QTH-060-01-L-D-A
- Number of Positions: 120
- Number of Rows: 2
- Pitch: 0.5 mm

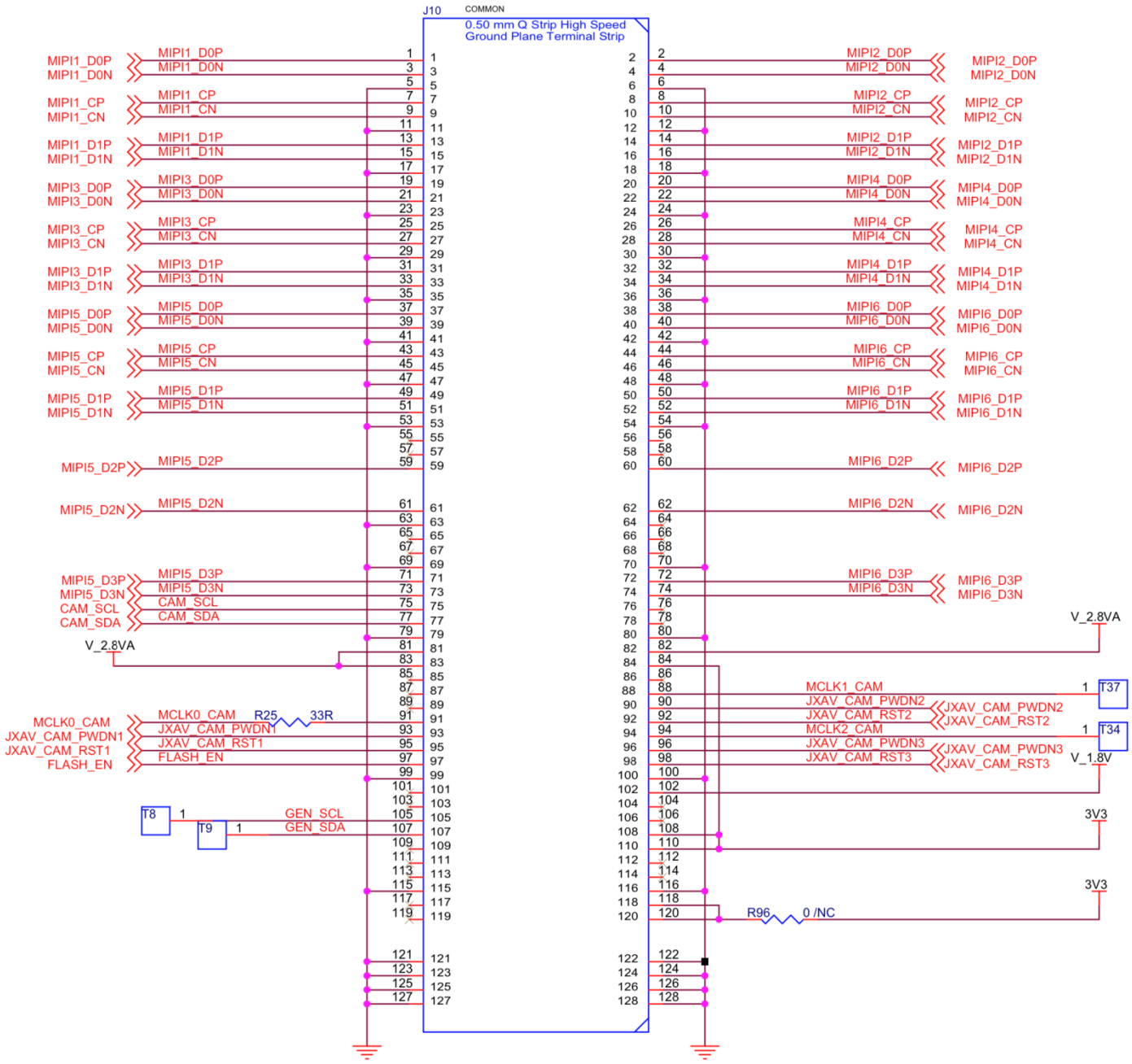

Leopard Imaging Inc.

48820 Kato Rd, Suite 100B, Fremont, CA 94538, USA
Phone: +1-408-263-0988
Fax: +1-408-217-1960
Email:sales@leopardimaging.com
Website: www.leopardimaging.com

LI-IMX335-MIPI-CS



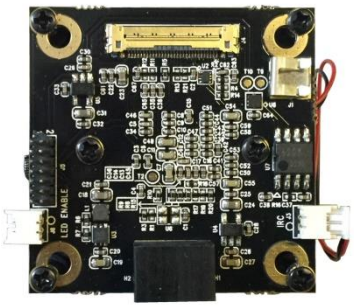

Camera Spec	
Image Sensor	Sony Diagonal 6.52 mm (Type 1/2.8) 5MP CMOS Image Sensor IMX335
Optical format	1/2.8”
Number of active pixels	2608 (H) x 1960(V)
Pixel size	2.0um (H) x 2.0um (V)
Color or Mono	Color
Interface	MIPI interface
Lens mount	CS
IR switcher	Support
Weight	58 g
Interfaces	
Interface J4: ▪ Part#: 20525-030E-02C ▪ Number of Positions: 30 ▪ Pitch: 0.4mm ▪ Mating I-PEX cable: FAW-1233-03 (300mm)	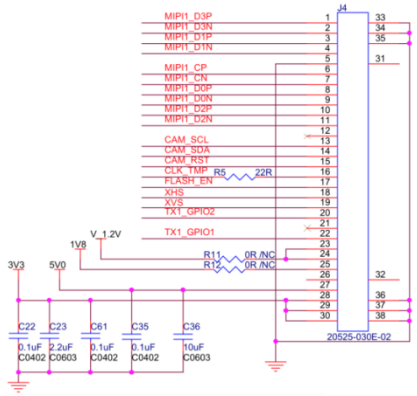
Interface J3: ▪ Part#: 1734829-2 ▪ Number of Positions: 2 ▪ Pitch: 1.25mm	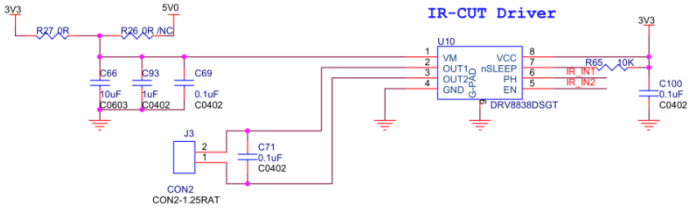
Interface J6: ▪ Part#: 1734829-2 ▪ Number of Positions: 2 ▪ Pitch: 1.25mm	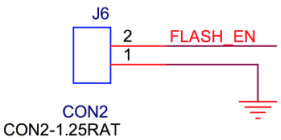

Leopard Imaging Inc.

48820 Kato Rd, Suite 100B, Fremont, CA 94538, USA
Phone: +1-408-263-0988
Fax: +1-408-217-1960
Email: sales@leopardimaging.com
Website: www.leopardimaging.com

Absolute Maximum Ratings

Item	Symbol	Min.	Max.	Unit	Remarks
Supply voltage (analog 1 : 2.9 V)	AV_{DD1}	-0.3	3.3	V	
Supply voltage (analog 2 : 2.9 V)	AV_{DD2}	-0.3	3.3	V	
Supply voltage (interface 1.8 V)	OV_{DD}	-0.3	3.3	V	
Supply voltage (digital1 : 1.2 V)	DV_{DD1}	-0.3	2.0	V	
Supply voltage (digital 2 : 1.2 V)	DV_{DD2}	-0.3	2.0	V	
Input voltage	VI	-0.3	OV_{DD} + 0.3	V	Not exceed 3.3 V
Output voltage	VO	-0.3	OV_{DD} + 0.3	V	Not exceed 3.3 V

Application Conditions

Item	Symbol	Min.	Typ.	Max.	Unit
Supply voltage (analog 1 : 2.9 V)	AV_{DD1}	2.80	2.90	3.00	V
Supply voltage (analog 2 : 2.9 V)	AV_{DD2}	2.80	2.90	3.00	V
Supply voltage (interface 1.8 V)	OV_{DD}	1.70	1.80	1.90	V
Supply voltage (digital1 : 1.2 V)	DV_{DD1}	1.10	1.20	1.30	V
Supply voltage (digital 2 : 1.2 V)	DV_{DD2}	1.10	1.20	1.30	V
Performance guarantee temperature	Tspec	-10	—	60	˚C
Operating guarantee temperature	Topr	-30	—	85	˚C
Storage guarantee temperature	Tstg	-40	—	85	˚C

Spectral Sensitivity Characteristics

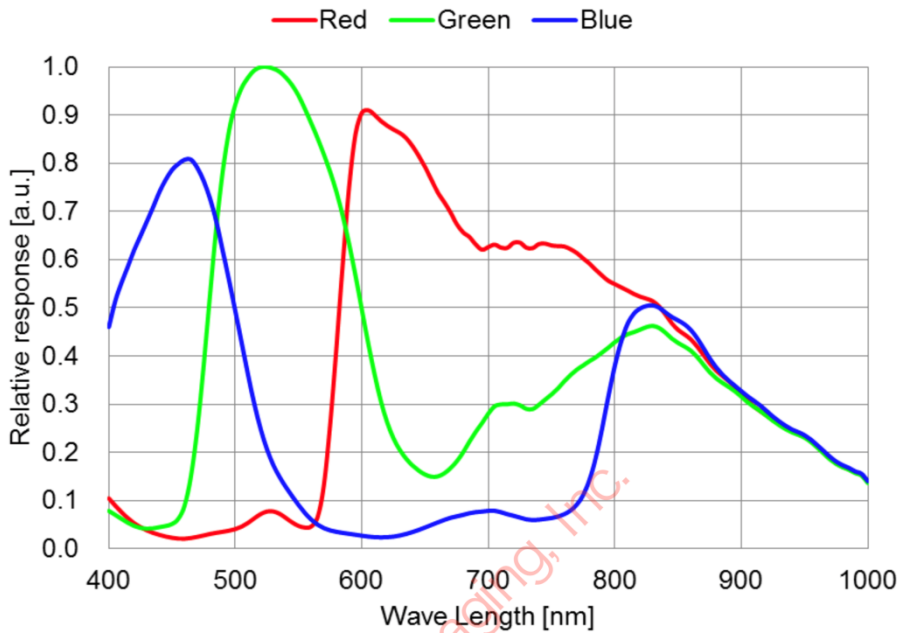

Leopard Imaging Inc.

48820 Kato Rd, Suite 100B, Fremont, CA 94538, USA
Phone: +1-408-263-0988
Fax: +1-408-217-1960
Email: sales@leopardimaging.com
Website: www.leopardimaging.com

DC Characteristics

Item		Pins	Symbol	Condition	Min.	Typ.	Max.	Unit
Supply voltage	Analog1	VDDSUB VDDHCP VDDHDA VDDHCM	AV_{DD1}		2.80	2.90	3.00	V
	Analog2	VDDHPX	AV_{DD2}		2.80	2.90	3.00	V
	Interface	VDDMIO	OV_{DD}		1.70	1.80	1.90	V
	Digital1	VDDLCN VDDLSC VDDLPL1	DV_{DD1}		1.10	1.20	1.30	V
	Digital2	VDDLPL2 VDDLPL3 VDDLIF	DV_{DD2}		1.10	1.20	1.30	V
Digital input voltage		XHS XVS XCLR INCK XMASTER SLAMODE SCL SDA TEST2	VIH	XVS / XHS Slave Mode	$0.8OV_{DD}$	—	—	V
			VIL		—	—	$0.2OV_{DD}$	V
		XHS XVS TOUT TEST1	VOH	XVS / XHS Master Mode	OV_{DD}-0.4	—	—	V
			VOL		—	—	0.4	V

Current Consumption

Item	Symbol	Typ.		Max.		Unit
		Standard luminous intensity	Saturated luminous intensity	Standard luminous intensity	Saturated luminous intensity	
Operating current MIPI CSI-2 / 4 Lane 12 bit, 30 frame/s All-pixel scan mode	I_{AVDD1}	28	27	42	41	mA
	I_{AVDD2}	22	22	33	32	mA
	I_{OVDD}	1	1	1	1	mA
	I_{DVDD1}	87	102	168	193	mA
	I_{DVDD2}	32	32	62	62	mA
Standby current	I_{AVDD1_STB}	—		0.1		mA
	I_{AVDD2_STB}	—		0.1		mA
	I_{OVDD_STB}	—		0.1		mA
	I_{DVDD1_STB}	—		16.8		mA
	I_{DVDD2_STB}	—		2.2		mA

Operating current: (Typ.) Supply voltage 2.90 V / 1.8 V / 1.2 V, Tj = 25 ˚C
(Max.) Supply voltage 3.00 V / 1.9 V / 1.3 V, Tj = 60 ˚C, worst state of internal circuit operating current consumption,

Standby: (Max.) Supply voltage 3.00 V / 1.9 V / 1.3 V, Tj = 60 ˚C, INCK: 0 V, light-obstructed state.

Standard luminous intensity: luminous intensity at 1/3 of the sensor saturated
Saturated luminous intensity: luminous intensity when the sensor is saturated.

48820 Kato Rd, Suite 100B, Fremont, CA 94538, USA
Phone: +1-408-263-0988
Fax: +1-408-217-1960
Email: sales@leopardimaging.com
Website: www.leopardimaging.com

AC Characteristics

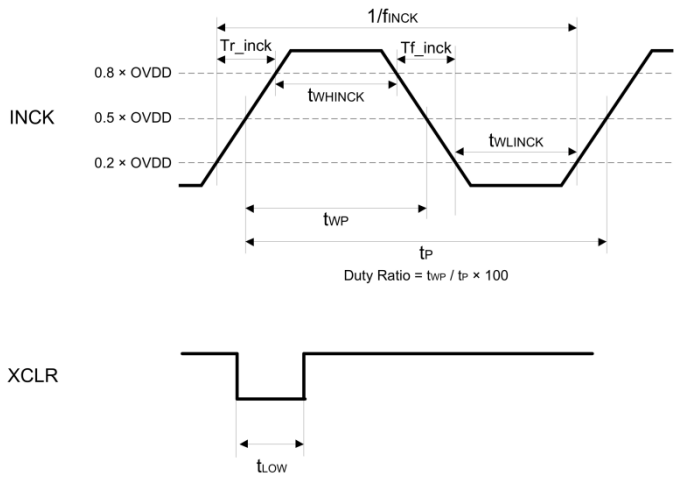

INCK 37.125MHz, 74.25MHz

Item	Symbol	Min.	Typ.	Max.	Unit	Remarks
INCK clock frequency	f_{INCK}	f_{INCK} × 0.96	f_{INCK}	f_{INCK} × 1.02	MHz	f_{INCK} = 37.125 MHz, 74.25 MHz
INCK Low level pulse width	t_{WLINCK}	4	—	—	ns	f_{INCK} = 37.125 MHz, 74.25 MHz
INCK High level pulse width	t_{WHINCK}	4	—	—	ns	f_{INCK} = 37.125 MHz, 74.25 MHz
INCK clock duty	—	45.0	50.0	55.0	%	Define with 0.5 × OV_{DD}
INCK Rise time	Tr_inck	—	—	5	ns	20 % to 80 %
INCK Fall time	Tf_inck	—	—	5	ns	80 % to 20 %
XCLR Low level pulse width	t_{LOW}	100	—	—	ns	

*The INCK fluctuation affects the frame rate.

INCK 6 to 27MHz

Item	Symbol	Min.	Typ.	Max.	Unit	Remarks
INCK clock frequency	f_{INCK}	6	—	27	MHz	f_{INCK} = 6 to 27MHz
INCK Low level pulse width	t_{WLINCK}	5	—	—	ns	f_{INCK} = 6 to 27MHzz
INCK High level pulse width	t_{WHINCK}	5	—	—	ns	f_{INCK} = 6t o 27MHz
INCK clock duty	—	45.0	50.0	55.0	%	Define with 0.5 × OV_{DD}
INCK Rise time	Tr_inck	—	—	5	ns	20 % to 80 %
INCK Fall time	Tf_inck	—	—	5	ns	80 % to 20 %
XCLR Low level pulse width	t_{LOW}	100	—	—	ns	

*The INCK fluctuation affects the frame rate.

48820 Kato Rd, Suite 100B, Fremont, CA 94538, USA
Phone: +1-408-263-0988
Fax: +1-408-217-1960
Email: sales@leopardimaging.com
Website: www.leopardimaging.com

Serial Communication

I^2C

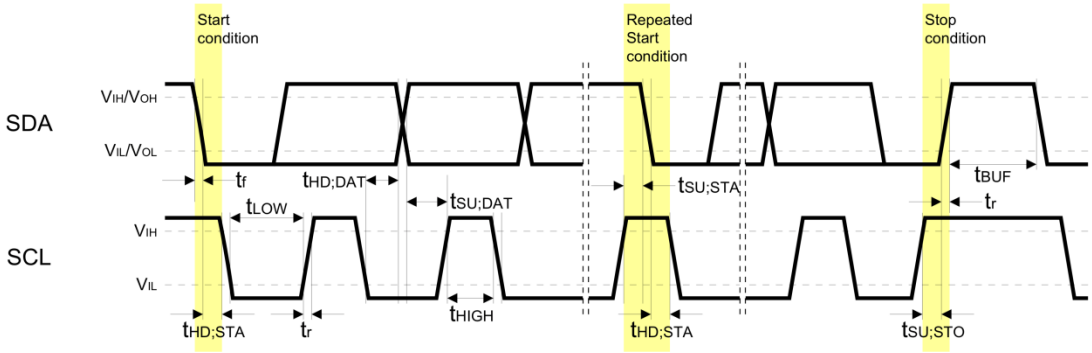

I^2C Specification

Item	Symbol	Min.	Typ.	Max.	Unit	条件
Low level input voltage	VIL	-0.3	—	$0.3 \times OV_{DD}$	V	
High level input voltage	VIH	$0.7 \times OV_{DD}$	—	1.9	V	
Low level output voltage	VOL	0	—	$0.2 \times OV_{DD}$	V	OVDD < 2 V, Sink 3 mA
High level output voltage	VOH	$0.8 \times OV_{DD}$	—	—	V	
Output fall time	tof	—	—	250	ns	Load 10 pF – 400 pF, $0.7 \times OV_{DD} – 0.3 \times OV_{DD}$
Input current	Ii	-10	—	10	μA	$0.1 \times OV_{DD} – 0.9 \times OV_{DD}$
Input Capacitance for SCL / SDA	Ci	—	—	10	pF	

I^2C AC Characteristics

Item	Symbol	Min.	Typ.	Max.	Unit
SCL clock frequency	f_{SCL}	0	—	400	kHz
Hold time (Start Condition)	$t_{HD;STA}$	0.6	—	—	μs
Low period of the SCL clock	t_{LOW}	1.3	—	—	μs
High period of the SCL clock	t_{HIGH}	0.6	—	—	μs
Set-up time (Repeated Start Condition)	$t_{SU;STA}$	0.6	—	—	μs
Data hold time	$t_{HD;DAT}$	0	—	0.9	μs
Data set-up time	$t_{SU;DAT}$	100	—	—	ns
Rise time of both SDA and SCL signals	t_r	—	—	300	ns
Fall time of both SDA and SCL signals	t_f	—	—	300	ns
Set-up time (Stop Condition)	$t_{SU;STO}$	0.6	—	—	μs
Bus free time between a STOP and START Condition	t_{BUF}	1.3	—	—	μs

48820 Kato Rd, Suite 100B, Fremont, CA 94538, USA
Phone: +1-408-263-0988
Fax: +1-408-217-1960
Email: sales@leopardimaging.com
Website: www.leopardimaging.com

Power-on Sequence

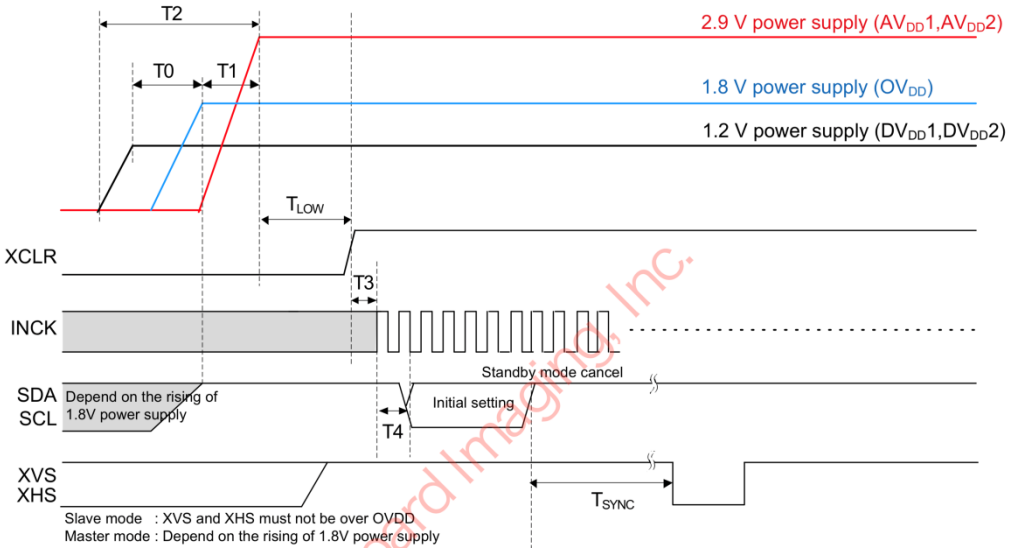

Item	Symbol	Min.	Max.	Unit
1.2 V power supply rising → 1.8 V power supply rising	T0	0	—	ns
1.8 V power supply rising → 2.9 V power supply rising	T1	0	—	ns
Rising time of all power supply	T2	—	200	ms
2.9 V power supply rising → Clear OFF	T_{LOW}	500	—	ns
Clear OFF → INCK rising	T3	0	—	μs
Clear OFF → Communication start	T4	20	—	μs
Standby OFF (communication) → External input XHS,XVS (slave mode only)	T_{SYNC}	18	—	ms

Slew Rate Limitation of Power-on Sequence

Conform the slew rate limitation shown below when power supply change 0 V to each voltage (0 % to 100 %) in power-on sequence.

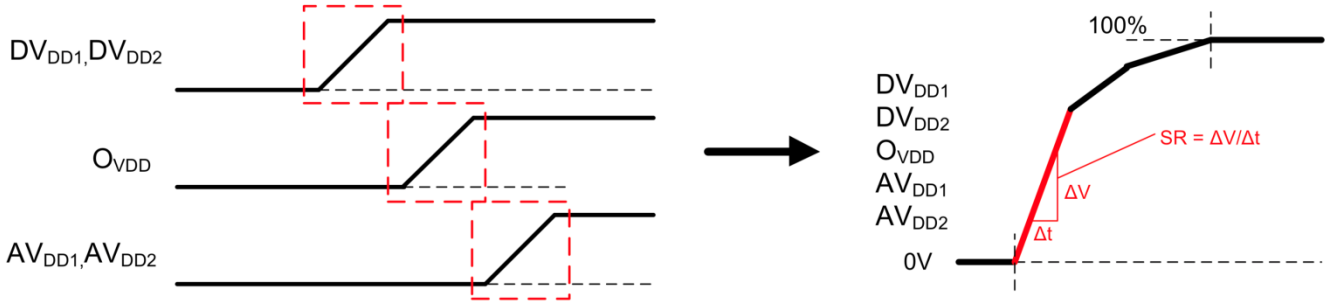

Item	Symbol	Power supply	Min.	Max.	Unit	Remarks
Slew rate	SR	DV_{DD1} ,DV_{DD2}(1.2 V)	—	25	mV/μs	
		OV_{DD} (1.8 V)	—	25	mV/μs	
		AV_{DD1} ,AV_{DD2}(2.9 V)	—	25	mV/μs	

Leopard Imaging Inc.

48820 Kato Rd, Suite 100B, Fremont, CA 94538, USA
Phone: +1-408-263-0988
Fax: +1-408-217-1960
Email: sales@leopardimaging.com
Website: www.leopardimaging.com

Power-off Sequence

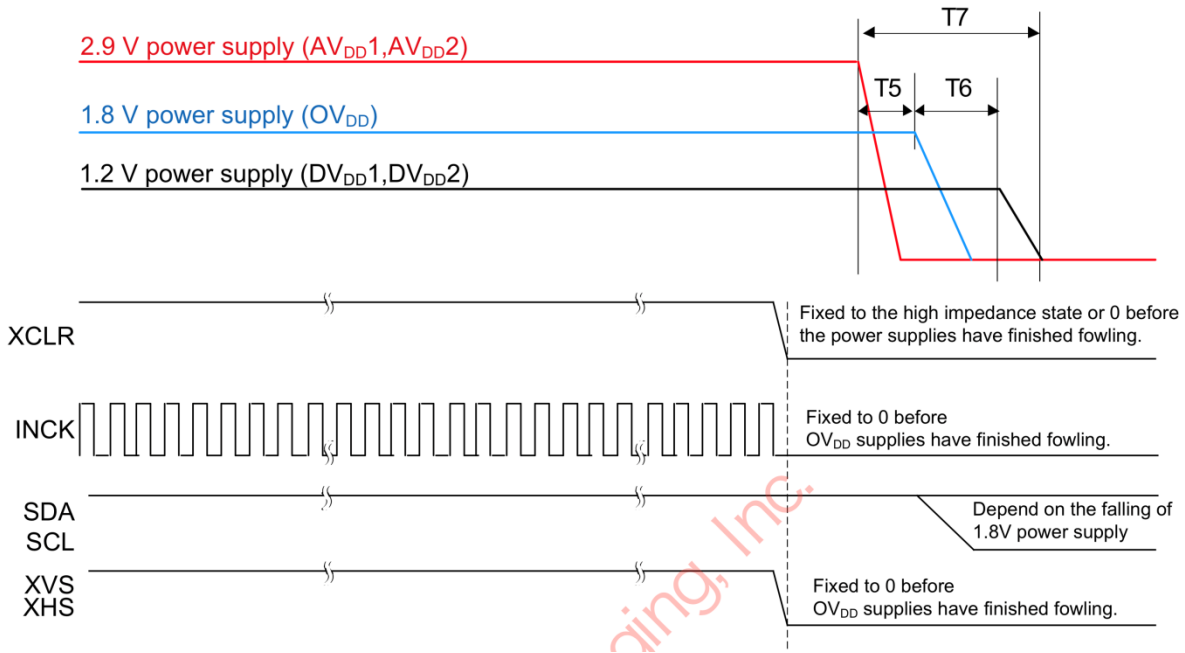

Item	Symbol	Min.	Max.	Unit
2.9 V power shut down → 1.8 V power shut down	T5	0	—	ns
1.8 V power shut down → 1.2 V power shut down	T6	0	—	ns
Shut down time of all power supply	T7	—	200	ms

48820 Kato Rd, Suite 100B, Fremont, CA 94538, USA
Phone: +1-408-263-0988
Fax: +1-408-217-1960
Email: sales@leopardimaging.com
Website: www.leopardimaging.com

Revision History

Revision	Description	Release Date
1.0	First Release	11. May. 2019
1.1	Add LI-JXAV-MIPI-ADPT-6CAM-FP board	6. Nov. 2019

Leopard Imaging Inc.

48820 Kato Rd, Suite 100B, Fremont, CA 94538, USA
Phone: +1-408-263-0988
Fax: +1-408-217-1960
Email:sales@leopardimaging.com
Website: www.leopardimaging.com